TRT MADE POSSIBLE

PILOT P500

PiLOT

Suitable for small trucks and motorhomes. Travel in comfort!

The Pilot P500 seat is a cost-effective solution for small trucks and motorhomes. It features a static high back with a fully integrated right-hand shoulder, three-point safety belt. It has a fully foldable backrest for easy cab access, making it ideal for motorhomes and campers.

This seat is tested to **ECE R14-M1/N1** as required for motorhomes.

Features include:
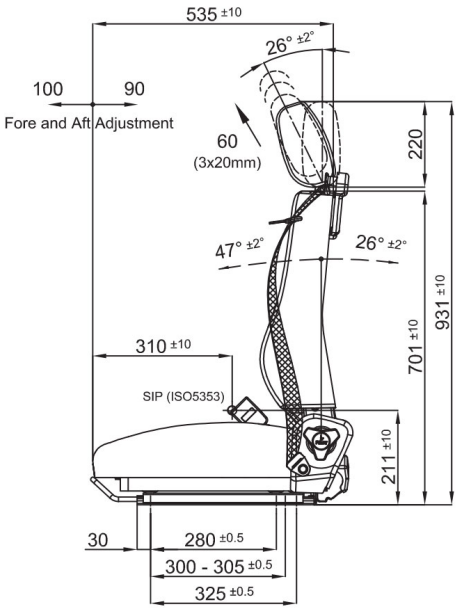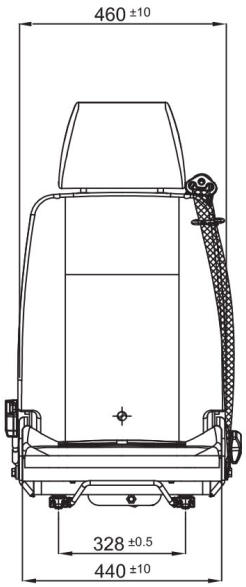
- Integrated 3-point safety belt
- Adjustable headrest
- Slide rails for fore and aft adjustment
- Adjustable backrest for optimal comfort
- Fully foldable backrest for easy cab access
- Testing to ECE R14-M1/N1