RL228 AIR SUSPENSION

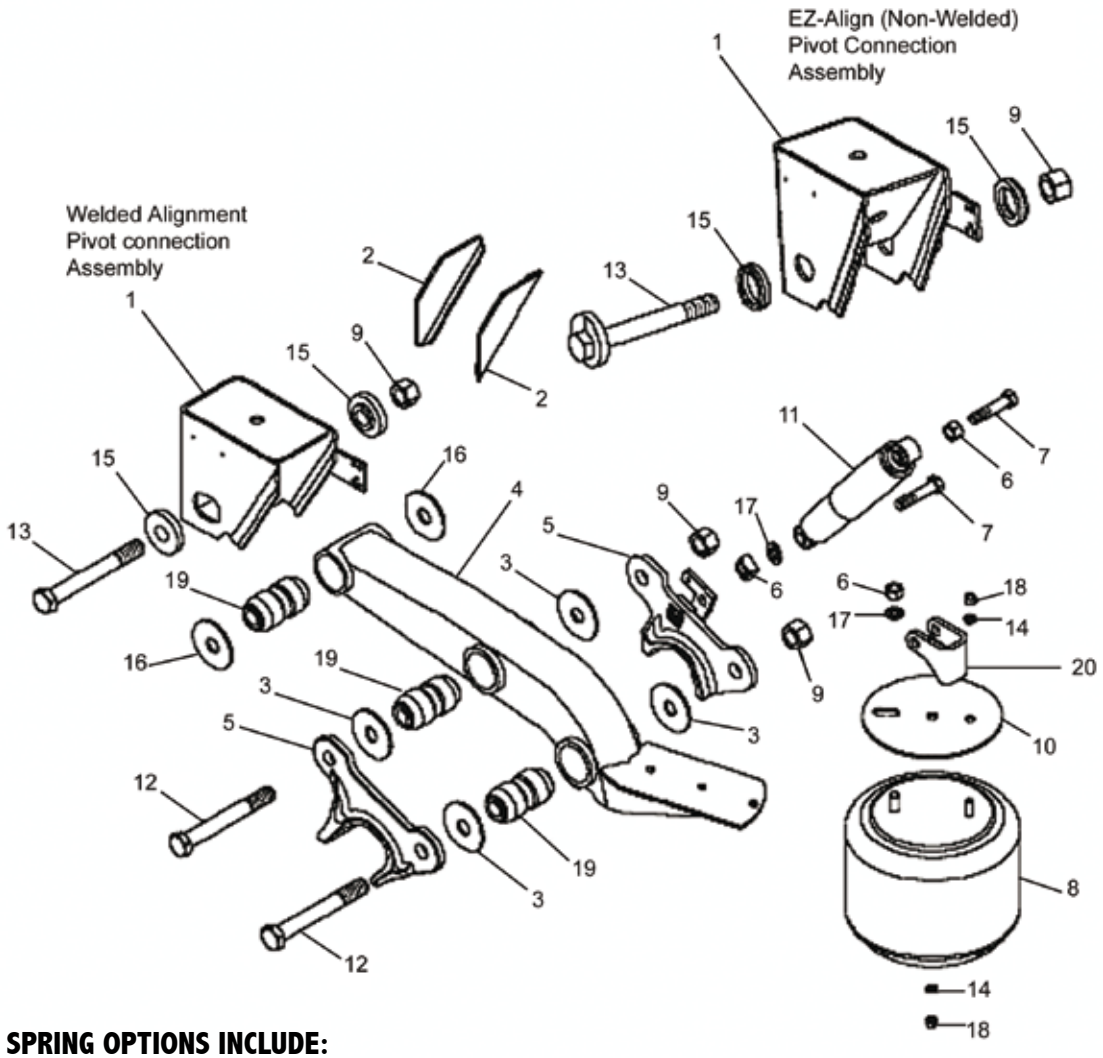
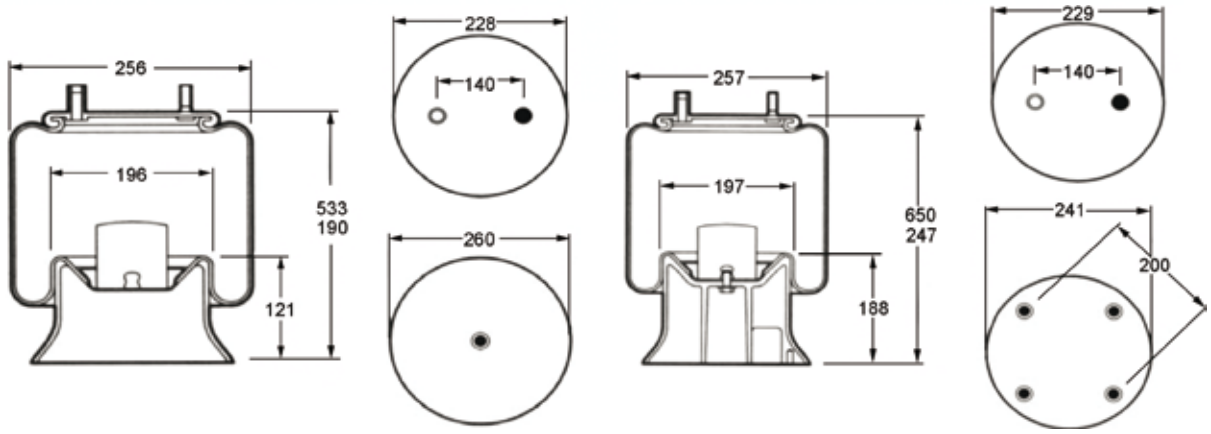
AIR SPRING OPTIONS INCLUDE: